Allegro MicroSystems, LLC.

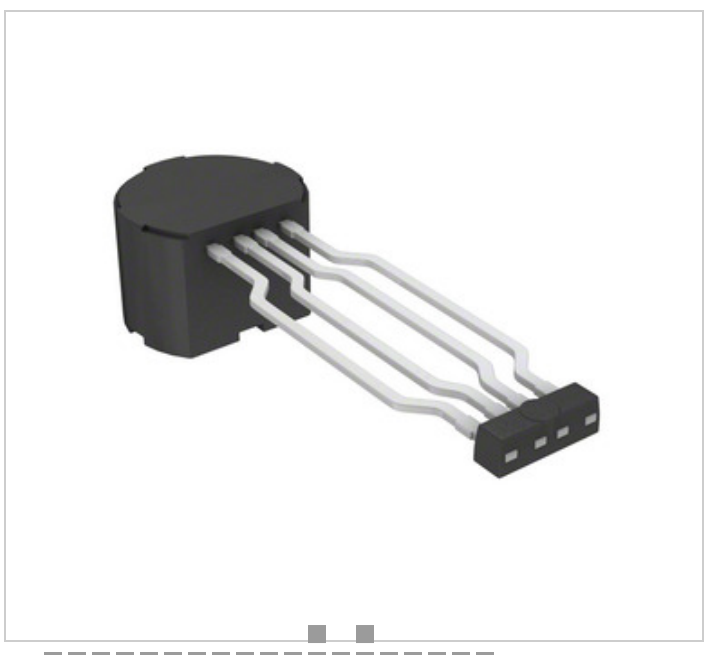

ATS635LSETN-T

Part Number:

Datasheets:

RoHs

ATS635LSETN-T

Allegro MicroSystems, LLC.

MAGNETIC SWITCH SPEC PURP 4SIP

ATS635LSETN-T.pdf

Lead free / RoHS Compliant

DHL/Fedex/TNT/UPS/EMS

REQUEST FOR QUOTATION

ATS635LSETN-T

PART NUMBER	ATS635LSETN-T
	Allegro MicroSystems, LLC.
	MAGNETIC SWITCH SPEC PURP 4SIP
/ ROHS	Lead free / RoHS Compliant
	ATS635LSETN-T.pdf
VOLTAGE-SUPPLY	4.2 V ~ 24 V
TEST CONDITION	-
	Hall Effect
PACKAGE DEVICE SUPPLIER	4-SIP
SERIES	Automotive, AEC-Q100
SENSING RANGE	Programmable
POLARIZATION	-
	Tape & Reel (TR)
PACKAGE / CASE	4-SSIP Formed Leads
	Open Collector
OPERATING TEMPERATURE	-40°C ~ 150°C (TA)
(MSL)	1 (Unlimited)
/ ROHS	Lead free / RoHS Compliant
	Special Purpose
	Programmable Trip Point
	Digital Switch Special Purpose Open Collector Hall Effect 4-SIP
CURRENT-SUPPLY (MAX)	5.5mA
- ( )	20mA

Related Tags

Allegro MicroSystems, LLC. ATS635LSETN-T	ATS635LSETN-T	ATS635LSETN-T
ATS635LSETN-T	ATS635LSETN-T	ATS635LSETN-T
ATS635LSETN-T PDF	ATS635LSETN-T Datasheet	ATS635LSETN-T
ATS635LSETN-T	ATS635LSETN-T	Allegro MicroSystems, LLC. ATS635LSETN-T
Allegro MicroSystems, LLC. ATS635LSETN-T	Allegro MicroSystems, LLC.	Allegro MicroSystems, LLC.
Allegro MicroSystems, LLC. ATS635LSETN-T	Allegro Microsystems Inc ATS635LSETN-T	Allegro MicroSystems, LLC ATS635LSETN-T

ATS625LSGTN

: Allegro MicroSystems, LLC.
: MAGNETIC SWITCH SPEC PURP 4SIP
: Out stock

RFQ

ATS640A

: CTS Electronic Components
: CRYSTAL 64.0000MHZ 20PF T/H
: Out stock

RFQ

ATS635LSB-FP

: Allegro MicroSystems, LLC.
: MAGNETIC SWITCH SPEC PURP 4SIP
: Out stock

RFQ

ATS640ASM-1

: CTS Electronic Components
: CRYSTAL 64.0000MHZ 20PF SMD
: Out stock

RFQ

ATS617LSGTN-T

: Allegro MicroSystems, LLC.
: MAGNETIC SWITCH SPEC PURP 4SIP
: Out stock

RFQ

ATS627LSGTN-T

: Allegro MicroSystems, LLC.
: MAGNETIC SWITCH SPEC PURP 4SIP
: Out stock

RFQ

ATS640A-E

: CTS Electronic Components
: CRYSTAL 64.0000MHZ 20PF T/H
: Out stock

RFQ

ATS636LSETN-T

: Allegro MicroSystems, LLC.
: MAGNETIC SWITCH SPEC PURP 4SIP
: Out stock

RFQ

ATS636LSB-FP

: Allegro MicroSystems, LLC.
: MAGNETIC SWITCH SPEC PURP 4SIP
: Out stock

RFQ

ATS625LSGTN-T

: Allegro MicroSystems, LLC.
: MAGNETIC SWITCH SPEC PURP 4SIP
: Out stock

RFQ

ATS635LSETN

: Allegro MicroSystems, LLC.
: MAGNETIC SWITCH SPEC PURP 4SIP
: Out stock

RFQ

ATS636LSETN

: Allegro MicroSystems, LLC.
: MAGNETIC SWITCH SPEC PURP 4SIP
: Out stock

RFQ